Drawing is property of CPC.
It's strictly forbidden to copy, trace or go over third party with this drawing without written permission.

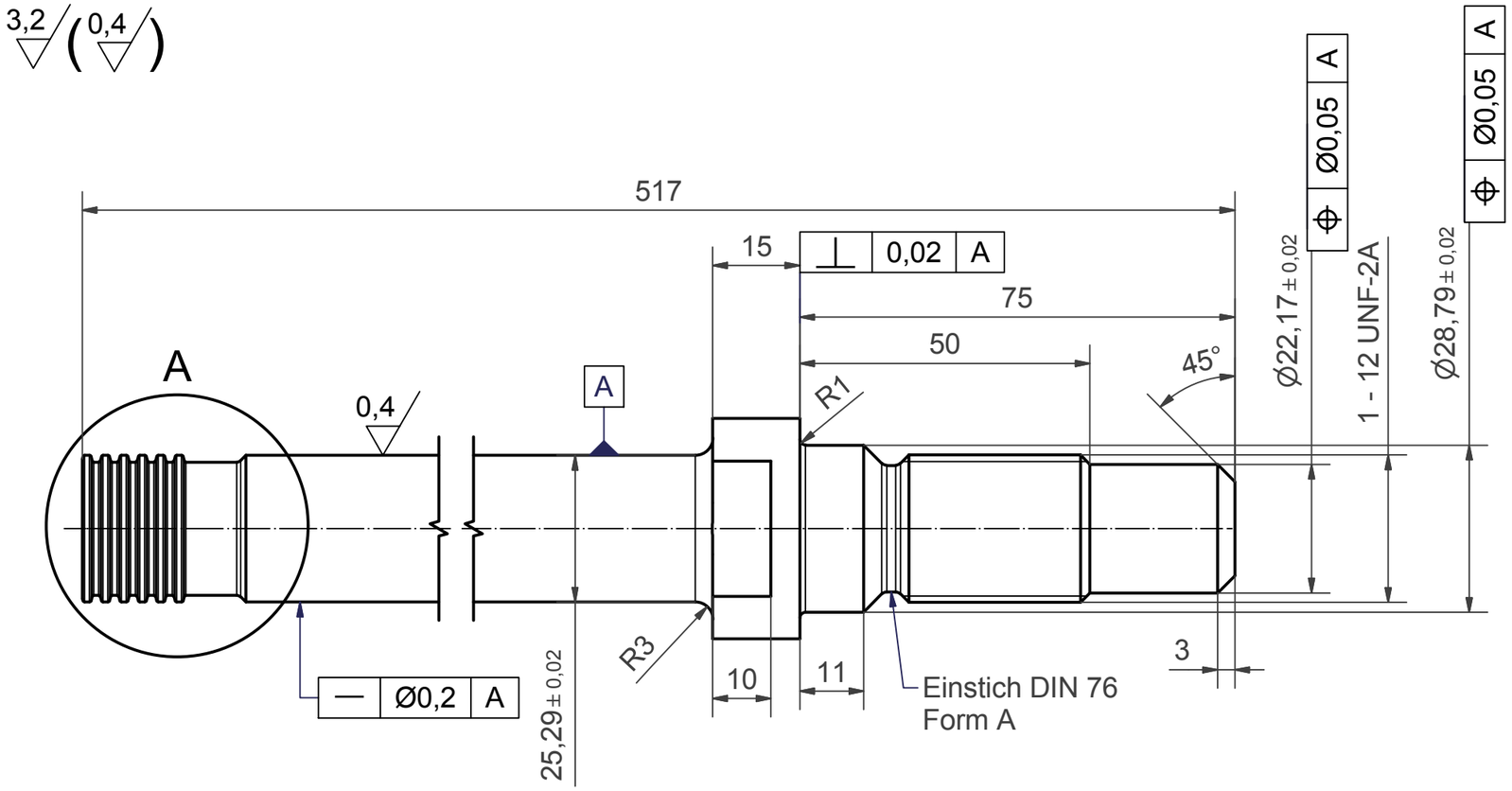

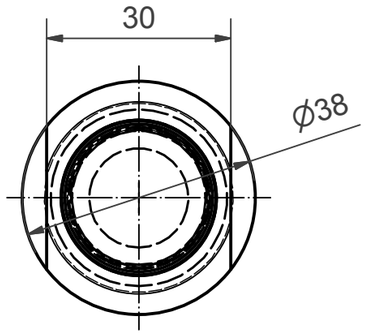

A (2 : 1)

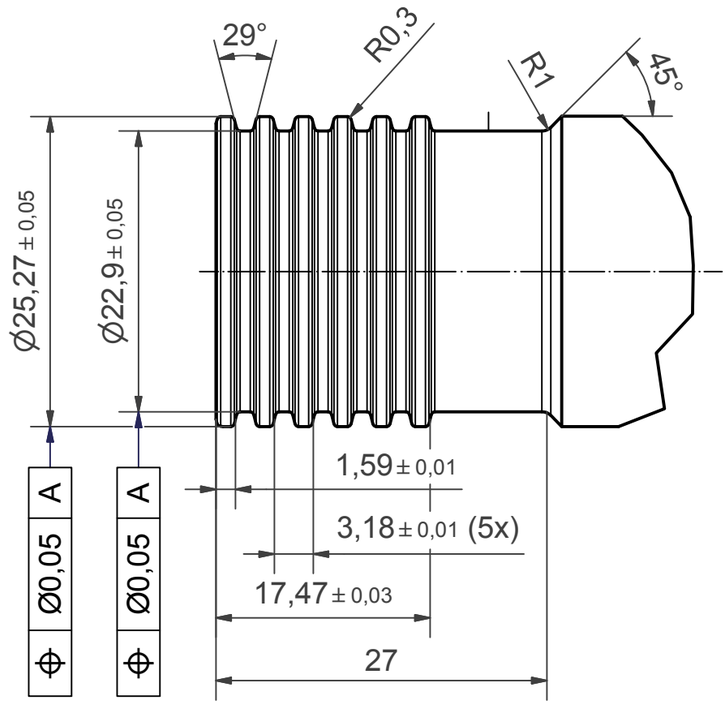

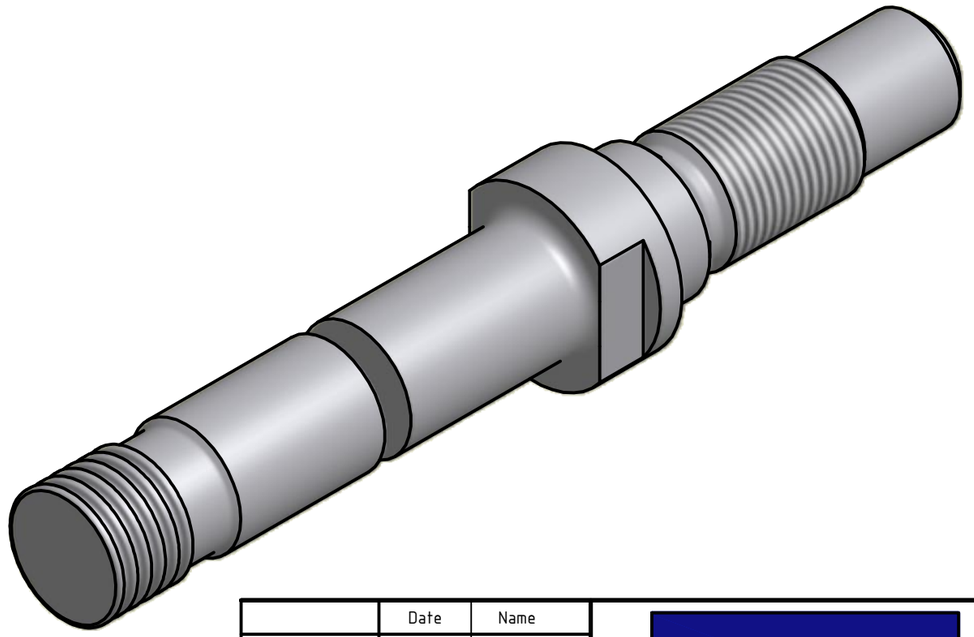

	Date	Name
Drawn	14.07.2009	
Approved		
Checked		

CPC
CARTER PROCESS CONTROL

Scale	Material	
1:1	1.4542	1" Stem, 6" Stroke
Quantity	Freimaßtoleranz DIN ISO 2768 m	Drawingnumber: 130400001 — Number of sheets.: 1 — Sheet No.: 1